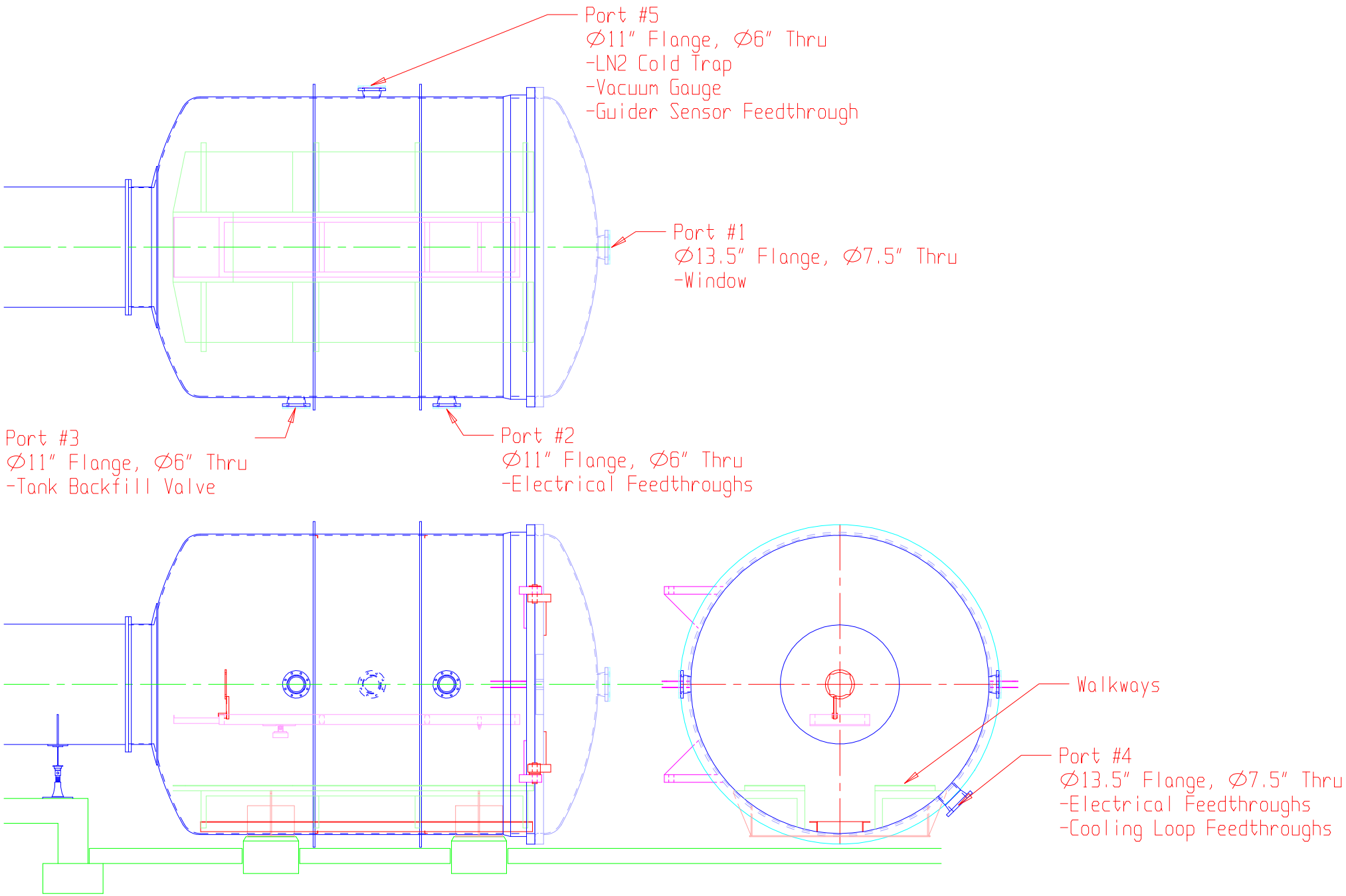
Port #5
∅11" Flange, ∅6" Thru
-LN2 Cold Trap
-Vacuum Gauge
-Guider Sensor Feedthrough
Port #1
∅13.5" Flange, ∅7.5" Thru
-Window
Port #3
∅11" Flange, ∅6" Thru
-Tank Backfill Valve
Port #2
∅11" Flange, ∅6" Thru
-Electrical Feedthroughs
Walkways
Port #4
∅13.5" Flange, ∅7.5" Thru
-Electrical Feedthroughs
-Cooling Loop Feedthroughs